AWLS Laser Distance Sensors

Triangulation (up to 600 mm)

- Extremely compact 20 x 44 x 25 mm (W x H x D)
- 0 – 5 V / 4 – 20 mA Analog output (switchable)
- PNP or NPN Transistor output
- Total integrated electronics
- Display to show the current measurements
- Extremely good price/performance ratio

	AWLS 5004 AA	AWLS 5007 AA	AWLS 5014 AA	AWLS 5028 AA	AWLS 5060 AA
MEASUREMENT DATA PNP TRANSISTOR OUTPUT					
Measuring range	25 – 35 mm	35 – 65 mm	65 – 135 mm	120 – 280 mm	200 – 600 mm
Repeat accuracy	10 µm	30 µm	70 µm	200 µm	300 – 800 µm
Linearity error	0.035 mm	0.065 mm	0.135 mm	0.56 mm	0.4 – 1.8 mm
Beam diameter	ø 50 µm	ø 70 µm	ø 120 µm	ø 300 µm	ø 500 µm

	AWLS 5004 NA	AWLS 5007 NA	AWLS 5014 NA	AWLS 5028 NA	AWLS 5060 NA
MEASUREMENT DATA NPN TRANSISTOR OUTPUT					
Measuring range	25 – 35 mm	35 – 65 mm	65 – 135 mm	120 – 280 mm	200 – 600 mm
Repeat accuracy	10 µm	30 µm	70 µm	200 µm	300 – 800 µm
Linearity error	0.035 mm	0.065 mm	0.135 mm	0.56 mm	0.4 – 1.8 mm
Beam diameter	ø 50 µm	ø 70 µm	ø 120 µm	ø 300 µm	ø 500 µm

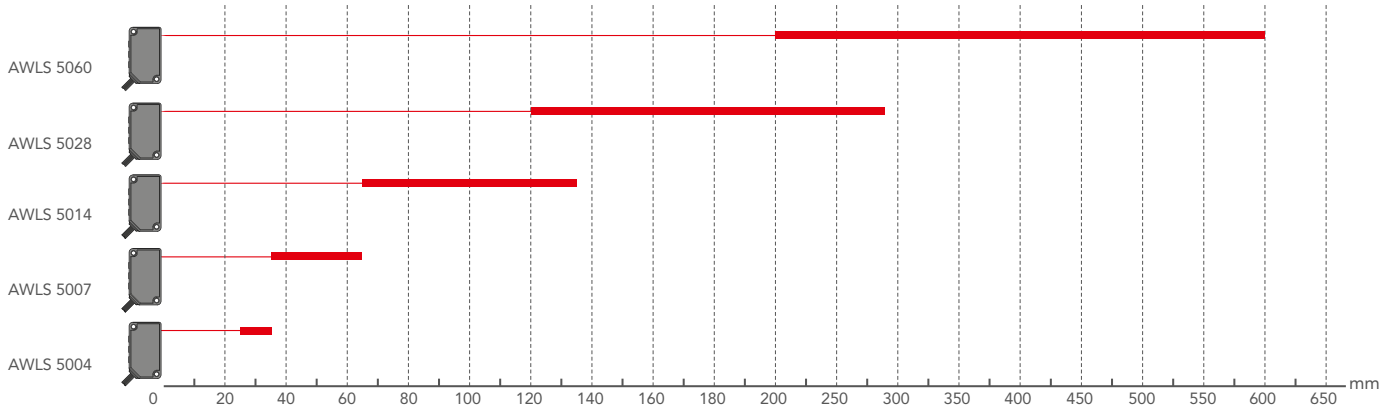

AWLS Laser Distance Sensors

0 – 5 V Analog output

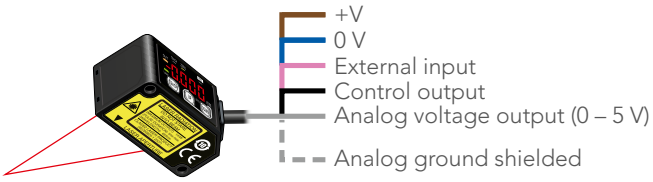

The AWLS sensor not only indicates measured values in mm but also produces analog voltage outputs. Various calculations and storage (logging) can be performed when output is taken into a PLC and analog unit.

A new optical system with a built-in mirror

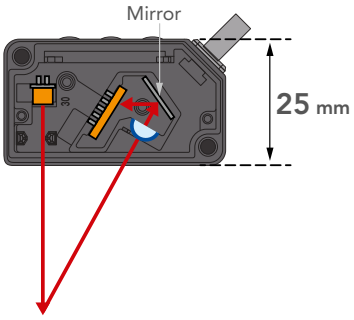

In general, more accurate and stable measurements can be obtained by increasing the optical path length between the receptor and the light receiving element (CMOS), but this also increases the sensor depth and the sensor body gets bigger. The AWLS series sensors incorporating a new optical system with a built-in mirror provides smaller sensor depth as well as higher measurement accuracy equivalent to displacement sensors.

Connection

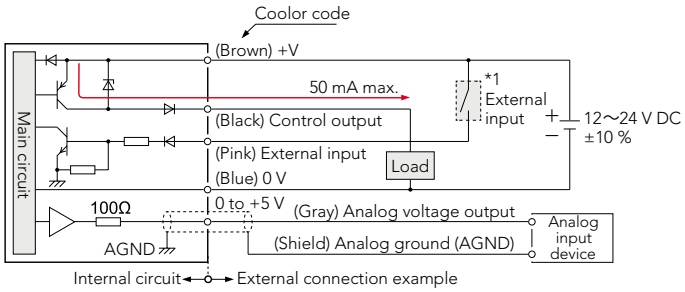

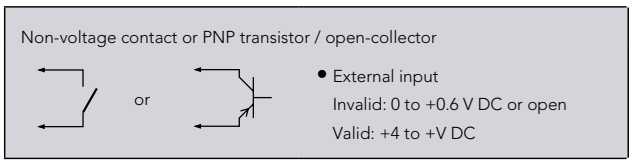

Technical Details

	AWLS
GENERAL DATA	
Measurement method	Triangulation
Light source	Laser
Wavelength	655 nm
Laser class	2
Receiving element	CMOS image sensor
Connection type	5-core cable, 2 m
Interface	None
Teach-in	Button
Beam type	Point
Power on indication	LED green
Switching status indicator	LED orange
Display	4-digit LED display, red
Electronic	Integrated
MEASUREMENT DATA	
Measuring frequency (max.)	333 Hz
Linearity	±0.1 - ±0.3 % F.S.
OUTPUTS	
Output circuit	Analog
Voltage output	0 – 5 V
Current output	4 – 20 mA
Impedance	100 Ω
Transistor output	PNP (AA) or NPN (NA)
Response time	1.5 ms / 5 ms / 10 ms
POWER SUPPLY	
Power supply	12 – 24 V DC
Power consumption	< 40 mA (24 V DC) / < 60 mA (12 V DC)
Short circuit protection	Yes
PHYSICAL CHARACTERISTICS	
Housing material	Aluminium
Dimensions (W x H x D)	20 x 44 x 25 mm
Front (optics)	Acryl
Ingress protection	IP67
Construction type	Rectangular
Weight	85 g (with cable)
ENVIRONMENTAL	
Operating temperature range	-10 – +45 °C
Storage temperature range	-20 – +60 °C
Humidity	35 – 85 %, non condensing
Ambient light immunity	< 3 klx

AWLS Laser Distance Sensors

Aluminum housing

A light-weight but strong die-cast aluminum casing has been adopted. A compact, solid body casing reduces the impact of strain and heat on the measurement accuracy.

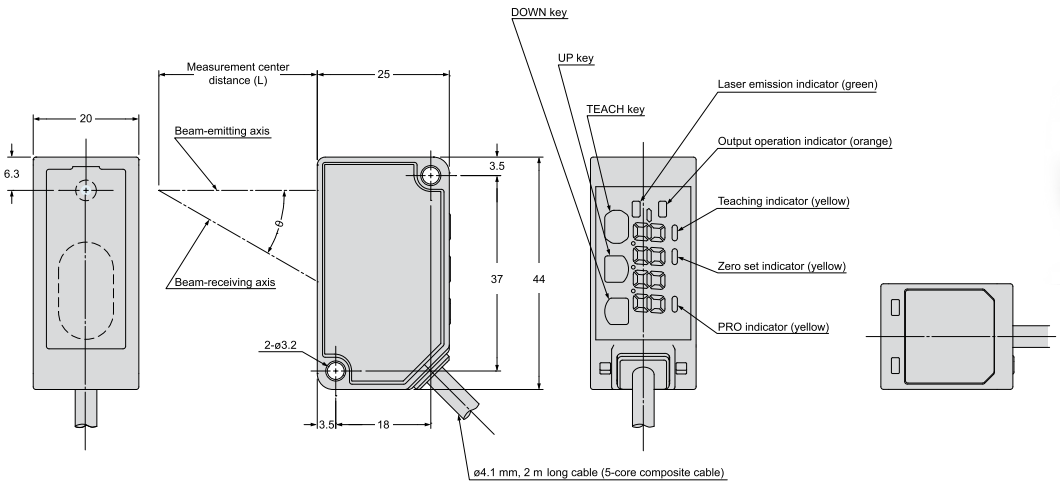

Linearity

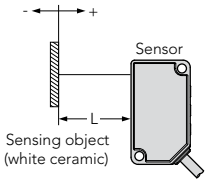

AWLS 5004

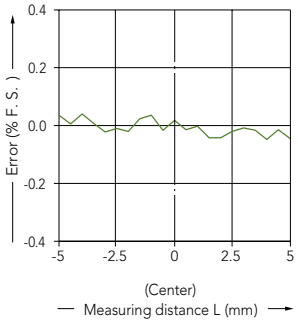

AWLS 5007

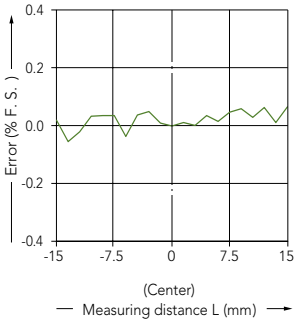

AWLS 5014

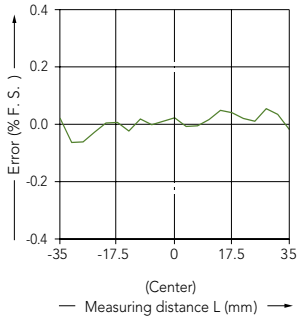

AWLS 5028

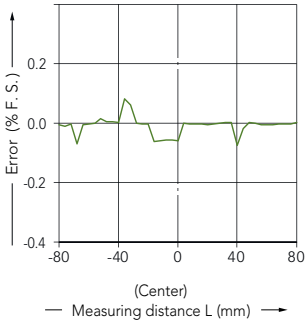

AWLS 5060

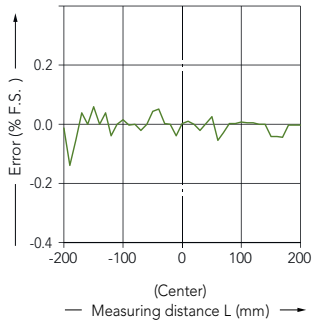

AWLS Laser Distance Sensors

Timer setting function

Off-delay timer:
Extends output signals by 5 ms. Appropriate in case a connected device is slow to respond and ON time is required to extend.

On-delay timer:
Overrides output signals for 5 ms after detection. Convenient way to override temporary signals and control with a time lag.

One-shot timer:
Sends output signals for only 5 ms after detection. Useful when the signal duration needs to be constant to meet inputs from a connected device. This mode is also used to extend temporary signals by a desired length of time.

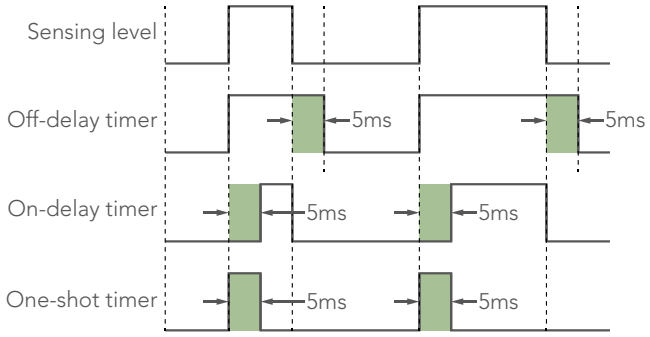

Teaching function

With an object below the sensor, press the TEACH key to set the valid range for distances via threshold values. There are 3 methods for setting the valid range: 1-point, 2-point, and 3-point teaching.

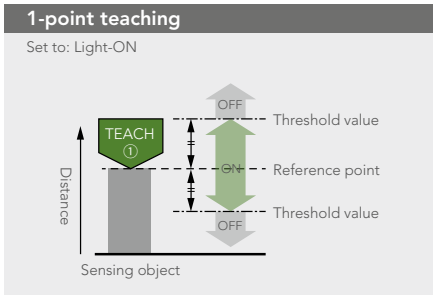

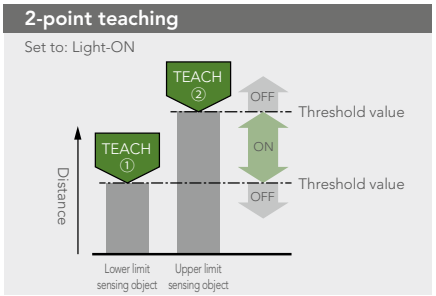

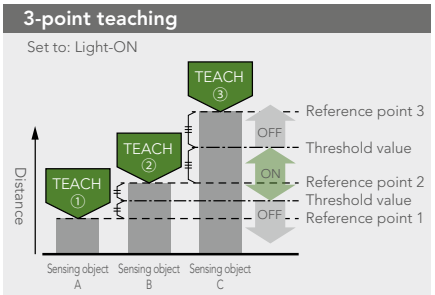

Perform 1-point teaching and the threshold range is set for the distance from the reference surface of the sensing object.

Press TEACH once for the lower (first point) and once for the upper limit (second point). Useful for sensing objects at different distances.

This is the method to set the threshold range by conducting the teaching at 3 points (sensing object A, B and C). After teaching, the reference points are automatically sorted in ascending order (reference point 1, 2 and 3). The thresholds are set at the midpoints between reference point 1 and 2, and 2 and 3, respectively. Useful for sensing objects at different distances.

AWLS Laser Distance Sensors

Proper use

When there are differences in material and color

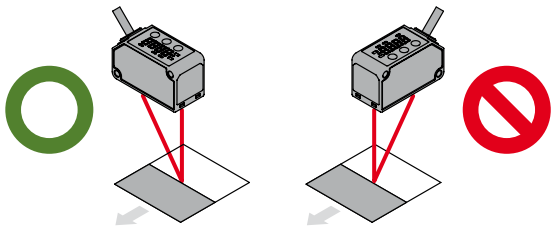

Measuring of narrow locations and recesses

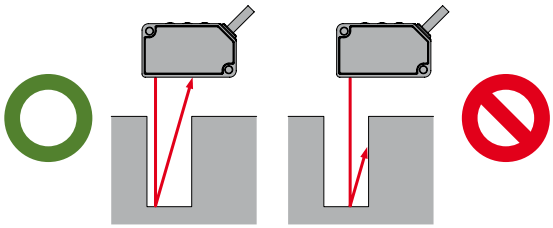

Measurement of rotating objects

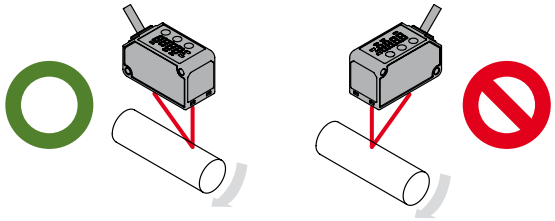

When mounting the product on a wall

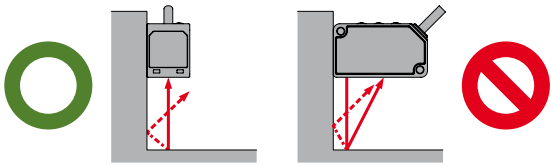

When there is a step

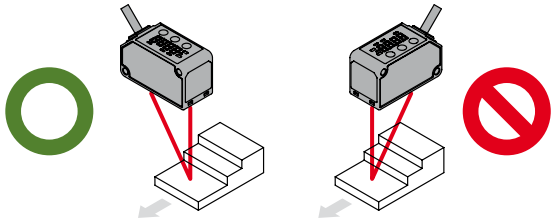

AWLS Laser Distance Sensors

Typical Applications

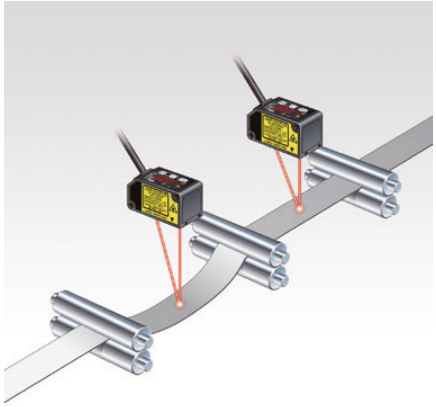

Measuring the hoop slack

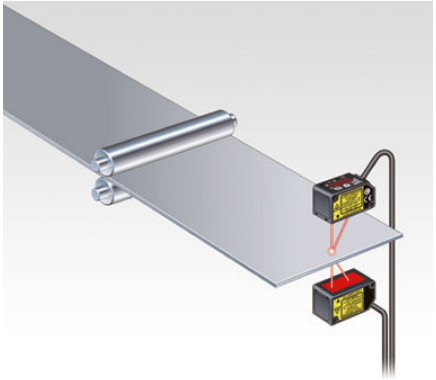

Measuring the thickness of a panel

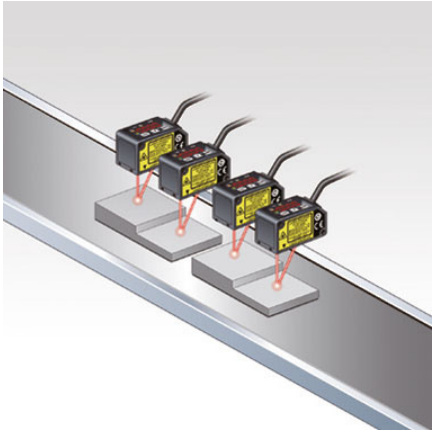

Measuring the thickness of a part

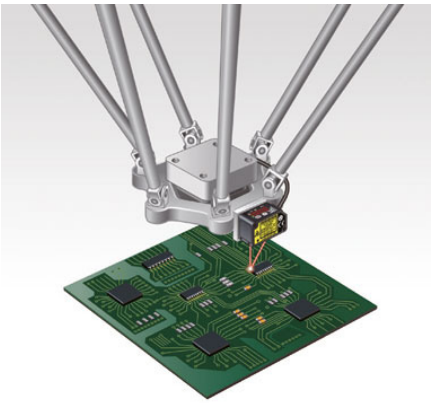

Controlling the parallel link robot height

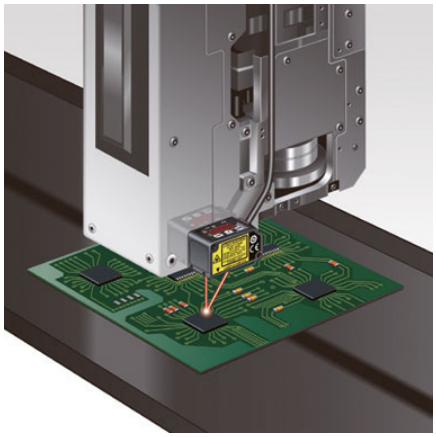

Controlling the mounter head height

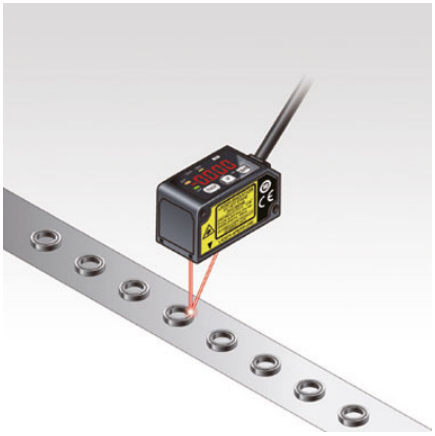

Checking for presence of packing

CAT-AWLS-V1.4 EN ed. 05/17 Welotec GmbH

Zum Hagenbach 7 • D-48366 Laer • Fon: +49 (0)2554/9130-00 • Fax: +49 (0)2554/9130-10 • info@welotec.com
www.welotec.com